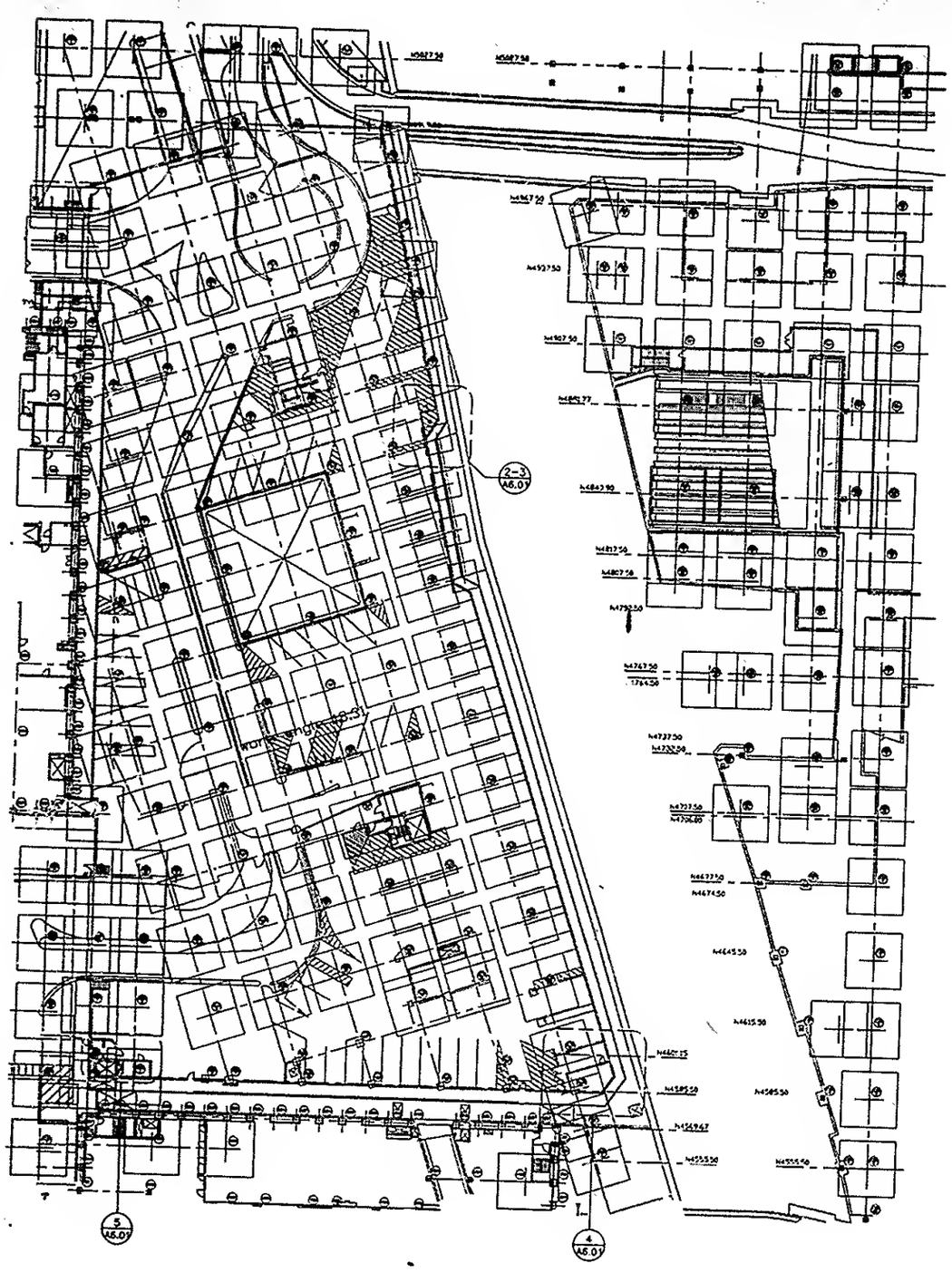

1 KEY PLAN @ B2 LEVEL

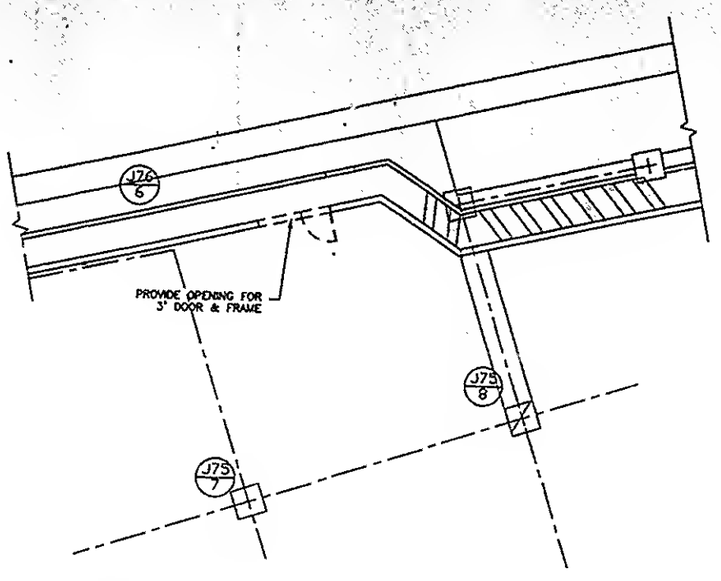

2 REMOVAL PLAN, PART. PLAN

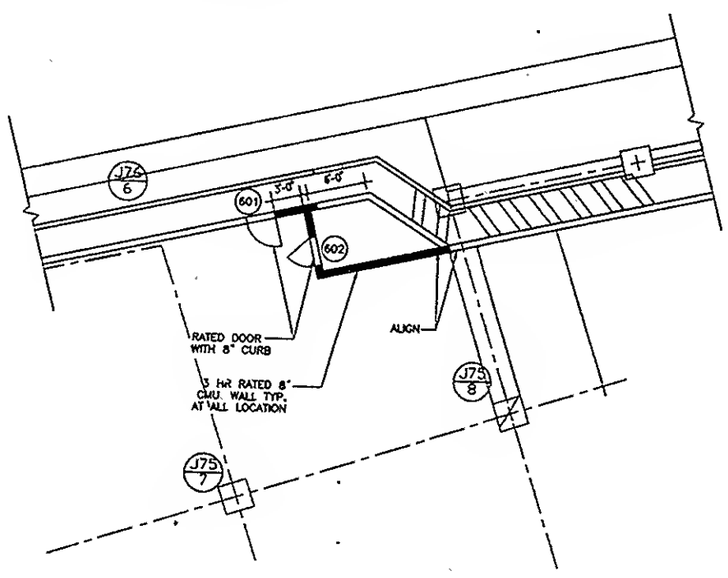

3 CONSTRUCTION PLAN, PART PLAN

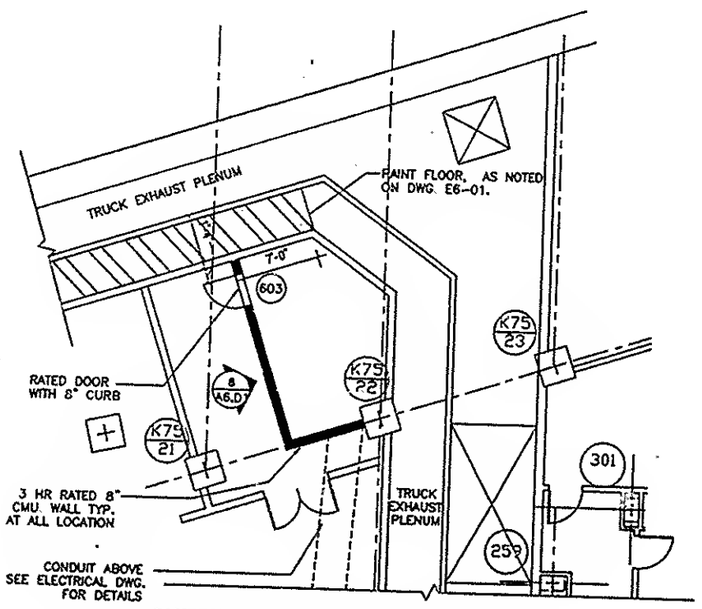

4 CONTRUCTION PLAN, PART PLAN

LEGEND

- DENOTES EXISTING WALL TO BE REMOVED
- DENOTES 8" SEMI-SOLID C.M.U. WALL